ISA Transactions 117 (2021) 160–171

Contents lists available at ScienceDirect

ISA Transactions

journal homepage: www.elsevier.com/locate/isatrans

Research article

Design, FPGA implementation and statistical analysis of a high-speed and low-area TRNG based on an AES s-box post-processing technique

Ali Murat Garipcan, Ebubekir Erdem *

Department of Computer Engineering, Fırat University, Elazığ, Turkey

ARTICLE INFO

Article history:
Received 9 January 2020
Received in revised form 6 January 2021
Accepted 25 January 2021
Available online 28 January 2021

Keywords:
TRNG
Jitter
AES s-box
Post-processing
Ring oscillators

ABSTRACT

The statistical weakness problem occurring as a result of physical randomness is an important shortcoming of TRNGs. Post-processing techniques are generally used in the literature to overcome this shortcoming. In this study, the hardware implementation of Advanced Encryption Standard (AES) substitution box (s-box)-based novel post-processing technique is presented. The low-cost novel method is based on the substitution s-box transformations and can successfully remove the statistical weakness problem of TRNGs. The real-time verification of the proposed post-processing is done by applying ring oscillator (RO) based TRNG architecture in four different scenarios on Field Programmable Gate Array (FPGA) environment. Successful statistical results obtained from bias, correlation, entropy and NIST 800-22 tests confirm the usability of the proposed method for cryptographic purposes. The low area-energy requirement, practicality and compressionless properties of the post-processing provide better tradeoff for TRNG compared to known methods in the literature. For this reason, TRNG's performance is high. Furthermore, the presented study is important in demonstrating that s-boxes with good mathematical encryption properties can also be used for different cryptographic purposes.

© 2021 ISA. Published by Elsevier Ltd. All rights reserved.

1. Introduction

A cryptographic system has two distinct components that are significant in terms of system security: keys and algorithmic protocols. The algorithmic structure of the protocols representing the cryptographic system is public for cryptanalysis supported studies. Another reason of this is that system security is continued through the privacy of inevitably important and less costly components rather than the algorithmic secrecy. Because, the algorithmic secrecy makes the system prone to a catastrophic collapse. For this reason, either of any cryptographic system or sub-protocols representing this system cannot generate more entropy at the output than at the input. Therefore, keys are the most crucial components of a cryptographic system in terms of system security and privacy [1,2].

In cryptography, the keys represented by randomly generated bit sequences are obtained in practice using primitives called Random Number Generators (RNGs). Depending on the security requirements of cryptographic applications, these primitives are divided into two separate design classes: True Random Number Generators (TRNGs) and Pseudo Random Number Generators (PRNGs). The PRNGs are algorithms generating random-looking numbers by expanding predefined seed values within their deterministic structures. The TRNGs use non-deterministic physical phenomena such as metastability, clock jitter, chaos, and thermal noise to generate true random numbers. Unlike PRNGs, TRNGs do not have a standard definition and the non-deterministic nature of the noise (entropy) sources enables these generators to behave as a one-way function [3,4].

Due to the nature of determinism, the entropy of the output bits in PRNGs cannot be higher than the entropy of the seed value. For this reason, knowing the seed or any internal state value can completely eliminate confidentiality and complexity in PRNGs. In addition to this, internal state repetition, i.e. periodicity, is another important deficiency limiting the use of PRNGs for sensitive cryptographic applications. TRNGs using physical randomness sources, remove these limitations that can lead to serious security risks of PRNGs. Because the stochastic behavior of the physical source alone meets the basic characteristic requirements such as unpredictability and irreproducibility for random numbers. This makes TRNGs a very important tool for cryptographic purposes even though they offer hardware-dependent, costly and slow solutions [5,6]. The general design hierarchy of TRNGs is presented in Fig. 1.

Ideally, it is desirable to have a TRNG that generates independent and uniformly distributed random numbers within a defined range [3]. However, this ideal definition based on theoretical mathematics is quite difficult to provide in practice for a physical TRNG. Because, the entropy of physical randomness sources

* Corresponding author.
E-mail addresses: 161129203@firat.edu.tr (A.M. Garipcan), aberdem@firat.edu.tr (E. Erdem).

https://doi.org/10.1016/j.isatra.2021.01.054
0019-0578/© 2021 ISA. Published by Elsevier Ltd. All rights reserved.

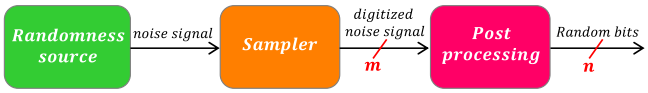

Fig. 1. A TRNG's hierarchical design components.

which is the heart of designs, is low. Also, the quality of statistical randomness in the system is directly linked the entropy of the noise source. Therefore, even if random numbers are correctly generated from the noise source, they cannot meet statistical randomness. Because, the presence of low entropy causes random numbers to be formed with erroneous distributions. Also, the random number sequences assumed to be independent in connection with the presence of bias contain strong statistical dependencies (correlations) in themselves. Failure to meet the uniform distribution and independence criteria for random numbers can submit useful information. This allows high-accuracy prediction of these numbers to the privileged attackers. For this reason statistical randomness is accepted as an important part of cryptographic secrecy and unpredictability for TRNGs [7–9].

This potential weakness of TRNGs is an important design requirement that must be eliminated in terms of cryptographic security. Otherwise, they cannot protect the output of their crypto systems against possible attacks, and endanger the security of the entire system. Generally, post-processing techniques are used in the literature in order to fulfill this basic requirement for TRNG. The post-processing techniques do not provide an additional true randomness contribution in the system. In contrast to the noise source, they are based on two different deterministic perspectives, algorithmic and cryptographic. The main purpose of these critical components in TRNGs is to ensure the random numbers are independent and uniformly distributed in a way that their statistical properties can be defined. In other words, TRNG's behavior is to bring ideal statistical definition as close as possible, and to make the produced random numbers resistant to aggressive tampering and external fluctuations [7,10,11].

In the literature, well-known algorithmic methods are available such as exclusive-OR (XOR) [12,13], Von Neumann [14] and H-function [15], which stand out with common features as simplicity and applicability. The computational complexity of these post-processing methods are low. Another common feature of these methods is that they can produce statistically successful results when random numbers are produced independent of each other. But the independence assumption for random numbers is practically not possible for a physical TRNG. For this reason, these methods may be insufficient for cases where random numbers are occurred with a high correlation or bias coefficient. In this case, these methods creating a statistically partial improvement effect on random numbers, do not guarantee the security of TRNG alone. Also, high compression rates of these methods limiting the output bit rate of TRNG, are another important problem. For instance, this rate is 1/2 for the XOR and H-function methods, while the average is 3/4 for the von Neumann method. This leads to a significant output rate and entropy loss in the system in addition to the cost increase. For the von Neumann method, compression rate may increase depending on the distribution of random numbers. In addition to these methods, there are also iterated von Neumann [16], Resilient function [9,17], Linear-Feedback Shift Register (LFSR) [18,19] and mixed algorithmic methods [20,21]. The compression rate is quite low in the iterated von Neumann method based on the recycling of the thrown bits in the classical method. But increasing the complexity of the method according to the number of steps and the inability to obtain a stable output bit rate for TRNG are important shortcomings of this method. Due to the high compression rate of 1/16, the production cost of random numbers in the Resilient function method is much higher than other methods. The results according to the production cost and output bit rate are worse for mixed methods in [20] and [21]. Because of the use of more than one algorithmic method together, the compression rate can be higher in these methods. Unlike these methods, the LFSR post-processing technique does not require compression. However, it can lead to extra dependencies that may indicate a strong correlation between random numbers. In addition, the fact that LFSRs are vulnerable to theoretical attacks as in [22]. That is an important security deficiency regarding posing serious risks for TRNG.

In the literature, cryptographic systems such as hash functions [23–25] and block encryption systems [26] can be used as post-processing technique Due to their confusion and diffusion properties, they can produce statistically effective results for random numbers. However, the computational complexity of these methods is much higher than the algorithmic methods. Depending on the complexity, the area-energy consumption of the recommended cryptographic methods increases the production cost of random numbers in the system. That is an important factor limiting the practical applicability of TRNGs using these post-processing techniques on resource-restricted architectures and applications [8,11].

In addition to algorithmic and cryptographic methods, discrete-time chaos [27–29] and genetic algorithm [30]- based post-processing techniques are also used. Although they are similar to algorithmic methods due to their simple mathematical definitions, the complexity of chaotic systems in terms of hardware implementation can be higher than cryptographic methods. Therefore, the hardware cost increase caused by the proposed chaos-based methods is an important problem for practical usefulness of these methods. In addition, equalizing the sampling speed to the calculation time of chaotic systems, as in [27] and [28], is another limitation of these methods. This causes serious decreases in the output bit rate of TRNG. Another post-processing method proposed in [30] uses an heuristic evaluation algorithm. However, the method is not suitable for hardware implementation. Hence, the method is not suitable for a TRNG architecture requiring hardware-dependent solutions.

Although they have impressive results, the tradeoff problem among the evaluation parameters caused by the methods in the literature reduces the efficiency of TRNGs. For this reason, it is desirable that the post-processing technique solve the TRNG's inability producing statistical randomness problem with minimum cost in terms of area-energy requirement. This solution should also be based on maximum impact in terms of output bit rate, security and statistical randomness quality for the efficiency of TRNG. Accordingly, the exploration of new methods that can eliminate the deficiencies of existing methods with a better tradeoff in terms of TRNG, constitutes the main problem area of the study. In this context, the use of a new AES s-box-based post-processing technique is proposed for TRNGs as an alternative to current methods in the literature. Our main contributions in this paper are summarized as follows:

(1) The study is important in terms of demonstrating that the s-boxes can be used for different cryptographic purposes, such as generating high-quality random numbers. In this respect, the proposed s-box-based novel method offers a different perspective that can be a source for future studies in this area.
(2) Unlike the methods in the literature not guaranteeing good statistical properties of TRNG without resorting to compression-based operations, the proposed method is compressionless. This feature stands out as one of the original aspects of the method. Also, that is an important

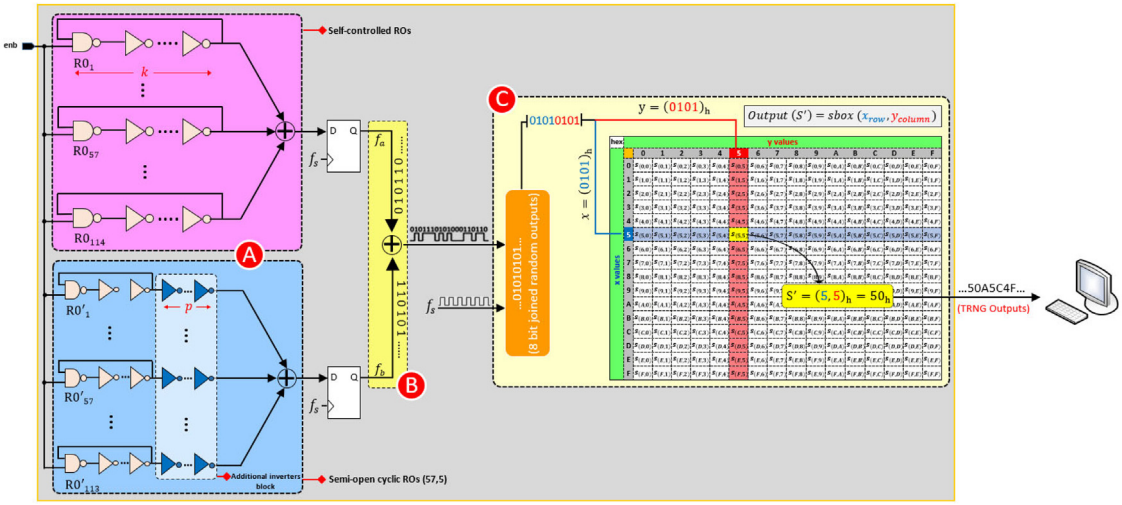

Fig. 2. The overall block scheme of the TRNG.

advantage with respect to eliminating the limiting effects such as entropy and output bit rate loss caused by known methods on TRNG.

(3) The complex algebraic architecture of AES s-box can be easily modeled as a look-up table at the hardware level. This case offers ease of implementation and ensures that the post-processing technique has low area-energy consumption. The providing low area-energy requirement is another prominent advantage of the proposed method. This provides easiness about the practical use of TRNG in today's lightweight architecture and applications where energy consumption is an important problem.

The rest of the paper is organized as follows: In Section 2, the details of the proposed post-processing technique and the TRNG architecture design are given. In Section 3, the FPGA implementation of the TRNG based on the proposed post-processing is explained. In Section 4, the proposed method is shown to be suitable for cryptographic purposes by measuring the hardware performance of the TRNG and conducting statistical analyses on the random numbers obtained from the post-processing technique. Finally, conclusions are offered in Section 5.

2. The overall architecture of the TRNG based on the proposed post-processing technique

The general design architecture of TRNG based on the proposed post-processing technique is as in Fig. 2. As seen in Fig. 2, TRNG architecture consists of three different hierarchical design components: RO based randomness (noise) source in (A), XOR (nonlinearity) layer in (B) and AES s-box based post-processing technique in (C). For a design model with a high output bit rate, Sunar and Stinson's [9] free-running RO architecture is preferred as the noise source of the TRNG. Fig. 2(A) is the noise source of TRNG and consists of 114 free-running ROs (RO_1, $RO_2 \ldots RO_{113}$, RO_{114}), each consisting of three inverters. The high-oscillating outputs of these parallel connected oscillators in the system are combined with the XOR. Then, the XOR outputs are sampled with the help of a D-type flip-flop and a non-periodic f_a signal (raw random numbers) is obtained.

Another hierarchical component of the system is the non-linearity layer in Fig. 2(B). Even though s-boxes are created based on non-linear methods or techniques, they use matrix-based linear transformations between input and output bits. This seemingly reversible behavior of s-boxes allows to obtain raw bits.

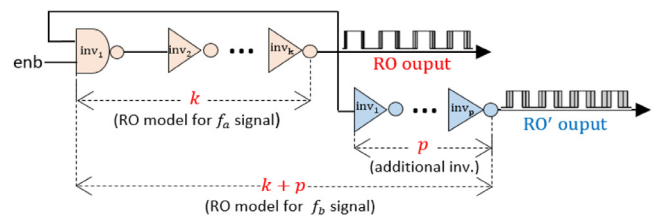

Fig. 3. Combinational definition of the RO architectures.

These bits contain the actual entropy of the system. As an example, for the 8-bit 11101110 true random output of the TRNG mapped by an s-box matrix as a post-processing technique, the raw 8-bit random number sequence would be 10011001. This phenomenon allows easy manipulation of TRNG outputs by attackers. It is not a desireable property in terms of cryptographic secrecy. Because output prediction must remain impossible even if all the protocols representing a cryptographic TRNG are known. Therefore, an additional input (f_b) is needed in order to avoid this undesirable situation and to make the proposed method a non-linear structure for TRNG. In the system, the semi-open cyclical RO model proposed in [13] is used as the entropy source of the f_b input. The combinational definition of the RO model is given in Fig. 3. Outputs of both entropy sources are used as input to the XOR-based non-linearity layer as in Fig. 2(B). The design of this layer is based on the idea of taking a high-level XOR of the key bits and the s-box input data as in block encryption systems. The non-periodic f_b is obtained with minimum design cost. It is used instead of the key bits, so the contribution of the true randomness is increased while the generator output bit rate has not dropped.

To make the proposed post-processing technique a non-linear structure for TRNG's security, a double entropy sourced generator model is adopted. To obtain the semi-open RO based entropy source in the system, two extra inverters are added to every odd-numbered RO output (RO_1, $RO_3 \ldots RO_{111}$, RO_{113}). In other words, this entropy source needed for f_b consists of an RO cluster (57, 5) defined on the noise source. The main purpose of adopting this model is to obtain the f_b input with the minimum design cost in terms of hardware.

In the semi-open cyclical model, the oscillation continuity is achieved by the feedback loop of ROs used as a noise source. Both RO architectures do not change the oscillator outputs for additional inverters at a logical level because they use an odd number

Table 1
AES s-box matrix.

	0	1	2	3	4	5	6	7	8	9	10	11	12	13	14	15
0	63	7C	77	7B	F2	6B	6F	C5	30	01	67	2B	FE	D7	AB	76
1	CA	82	C9	7D	FA	59	47	F0	AD	D4	A2	AF	9C	A4	72	C0
2	B7	FD	93	26	36	3F	F7	CC	34	A5	E5	F1	71	D8	31	15
3	04	C7	23	C3	18	96	05	9A	07	12	80	E2	EB	27	B2	75
4	09	83	2C	1A	1B	6E	5A	A0	52	3B	D6	B3	29	E3	2F	84
5	53	D1	00	ED	20	FC	B1	5B	6A	CB	BE	39	4A	4C	58	CF
6	D0	EF	AA	FB	43	4D	33	85	45	F9	02	7F	50	3C	9F	A8
7	51	A3	40	8F	92	9D	38	F5	BC	B6	RA	21	10	FF	F3	D2
8	CD	0C	13	EC	5F	97	44	17	C4	A7	7E	3D	64	5D	19	73
9	60	81	4F	DC	22	2A	90	88	46	EE	B8	14	DE	5E	0B	DB
10	E0	32	3A	0A	49	06	24	5C	C2	D3	AC	62	91	95	E4	79
11	E7	C8	37	6D	8D	D5	4E	A9	6C	56	F4	EA	65	7A	AE	08
12	BA	78	25	2E	1C	A6	B4	C6	E8	DD	74	1F	4B	BD	8B	8A
13	70	3E	B5	66	48	03	F6	0E	61	35	57	B9	86	C1	1D	9E
14	E1	F8	98	11	69	D9	8E	94	9B	1E	87	E9	CE	55	28	DF
15	8C	A1	89	0D	BF	E6	42	68	41	99	2D	0F	B0	54	BB	16

of inverters. However, the fact that the numbers of inverters for f_a and f_b are different, makes these two inputs characteristically different from each other. For TRNG, the sampling signal is common and the main principles of obtaining these non-periodic inputs are the same. In addition to the randomness, the another main purpose of limiting the additional inverter count to two for the semi-open RO model is to keep the energy consumption of the oscillators at a minimum level.

Another hierarchical component of TRNG is the AES s-box based post-processing technique as seen in Fig. 2(C). The structural definition of an $m\ x\ n$ s-box with n-bit input and m-bit output is $S : GF(2)^n \rightarrow GF(2)^m$, where $n \geq m$. The n-bit Boolean function and the s-box outputs for $x \in GF(2)^n$ are calculated to be $f_i : \{0, 1\}^n \rightarrow \{0, 1\}^m$ and $S(x) = (f_1(x), f_1(x), \ldots, f_m(x))$, respectively. To protect the encryption algorithms from advanced attacks such as linear and differential crypto analyses, strong s-box designs are needed. Basic design criteria such as bijectivity, non-linearity, Strict Avalanche Criterion (SAC), output Bit Independence Criterion (BIC), and equiprobable input/output XOR distribution are necessary to make s-box structures cryptographically strong [31,32].

In the literature, there are many s-box construction methods such as power polynomial, inversion mapping and pseudorandom methods. The most popular of these methods in terms of cryptographical properties is the inversion mapping method proposed by Nyberg [33]. This method is designed in the best-known cryptographic features [34]. The AES [35] s-box architecture based on the algebraic definition in Eq. (1), uses Nyberg method. The fixed AES s-box matrix obtained against the given algebraic expression is given in Table 1.

$$f(x) = x^{-1},\ x \in GF\left(2^8\right),\ f(0) = 0 \tag{1}$$

To accurately analyze the effectiveness of the post-processing method on raw random numbers, the TRNG architecture is constructed on four different sampling scenarios at 50, 100, 200 and 250 MHz. The easy applicability to four different sampling scenarios allows the TRNG to run with different configurations for the output bit rate. For user-controlled sampling scenarios, the design details of the TRNG architecture are given in Section 3.

The working principle of TRNG for the 200 MHz sampling scenario can be briefly summarized as follows: For this scenario, the generation time is 5 ns for one-bit random signs, representing by the f_a and f_b signals. The one-bit raw true random number is obtained by synchronized processing of the one-bit logic signs with the XOR function again inside the non-linearity layer every 5 ns. A raw random number of 8-bits is needed to apply the post-processing since the AES s-box is 8×8. So, raw random bits

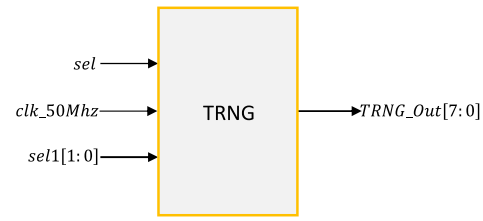

Fig. 4. Top-level schematic diagram of the TRNG.

coming from the non-linearity layer are merged consecutively. Thus, required 8-bit input vectors are obtained for the post-processing technique. In the 200 MHz sampling scenario, the generation time for an 8-bit input vector is 8×5 = 40ns in total. Next, these random numbers are mapped with the constant 8-bit s-box matrix values. After that, the true hexadecimal random outputs of the TRNG are obtained. For the input vector, the first and the second 4-bit parts are the row and column values of the fixed matrix, respectively. The 8-bit output is the value corresponding to the intersection of the row and column values on the matrix. For every scenario, the bit production rate of the TRNG is equal to the bit sampling frequency (f_s).

3. Hardware/digital implementation details

In practice, TRNGs have two desirable properties. First, they are completely based on digital design techniques. Second, they can be implemented using cheap silicon solutions. This practical perspective also enables the proposed digital solutions to be implemented on popular reconfigurable integrated platforms such as FPGA, Application Specific Integrated Circuit (ASIC) and Complex Programmable Logic Devices (CPLDs). Another important property desired is naturally the security of the system. For this purpose, the TRNG must be executed in a secure computational area. Also, the generated random numbers must not be allowed outside the system [7,8].

Basic cryptographic requirements such as practicality and system security have been decisive for FPGA preference in this study. As a result of these basic requirements for the hierarchical components of the proposed post-processing based TRNGs, the Quartus application development platform is used. Fig. 4 shows the top-level block diagram of the TRNG created by Very High-Speed Integrated Circuit Hardware Description Language (VHDL) dataflow and the schematic design techniques in the Quartus environment. Altera EPC4GX150 FPGA chip is used for hardware implementation of the study. The study is tested in four different scenarios in total and successful results are obtained.

The non-deterministic noise sources are the critical design components of TRNGs. Noise sources fitting the non-deterministic definition can easily be obtained from integrated circuits, such as FPGAs and ASICs. These integrated circuits are formed by logic circuit elements at an atomic level. The unstable delay caused by the physical structure of these circuit elements results in fluctuations in the propagation delay. This stochastic behavior of circuit elements is also observed as a periodic instability (clock jitter) in free-running ROs. In real-time applications, the amount and direction of periodic irregularity caused by thermal noise on clock signals are practically unpredictable. So, the use of free-running ROs alone can meet the non-deterministic definition of the noise/randomness source for a TRNG.

The combinational structure of the RO cores is given in Fig. 3. The hardware modeling of these core structures is as in Fig. 5. The RO core in Fig. 5 is formed by a 2 × 1 multiplexer (mux) and a block circuit element consisting of three inverters. In Fig. 3, a

mux is used instead of a not-and (NAND) function as the control variable of the RO. The data0 and the data1 pins of the mux are the enable and the feedback pins, respectively. The select pin of the mux is the user-controlled trigger signal for the oscillators obtained from the physical environment. For sel = '0', the data0 pin, in other words the enable pin (connected to +VCC), is active. In this case, the RO output is a constant at logic '1' level. To obtain the clock jitter at the oscillator output, the data1 (feedback) input must be active. For this purpose, sel = '1' is set and kept through the operation of the TRNG. In the system, 114 parallel connected RO cores are used as the noise source. In Fig. 5(A), for the semi-open cyclic RO, the block circuit component with two additional inverters at the single RO outputs is used.

Fig. 6 shows the hardware implementation and the design details of the TRNG whose block diagram is given in Fig. 4.

Fig. 6(A) is the RO-based noise source in which non-periodic f_a and f_b inputs are obtained in the system. These inputs are obtained by sampling the RO outputs combined with the XOR gate as in Fig. 6 with the help of s D-type flip-flop. The bit-level non-periodic oscillations representing the non-periodic f_a and f_b signals are synchronous because the sampling frequencies are common. Even though the working principles of both oscillator architectures are the same, the different number of inverters makes the non-periodic f_a and f_b signals are characteristically different from each other. These bit-level outputs are simultaneously XORed in the non-linearity layer as in Fig. 6(B). Then, these bit-level outputs combined with XOR are applied as input to the post-processing technique as in Fig. 6(C). The outputs of the post-processing recorded in the memory architecture in Fig. 6(D) are also the 8-bit true random outputs of TRNG.

3.1. Modeling of proposed post-processing technique

Another hierarchical component of the TRNG is the AES s-box-based post-processing block circuit element as in Fig. 6(C). The internals of this block have two dataflow-designed circuit as in Fig. 7. To apply the post-processing technique correctly, the 8-bit vector inputs of bit-level raw true random numbers are required. To obtain input vectors long enough for post-processing, the bit-level outputs are applied to the input of the circuit element (merge_block) as in Fig. 7(A). The other input of this circuit is the sampling frequency. The goal here is to simultaneously combine raw random numbers sampled from every clock pulse and create 8-bit input vectors for the s-box. The random numbers reach sufficient length every 8 clock pulses, and they are applied to input of the s-box (AES_sbox) circuit as in Fig. 7(B). The task of this circuit is to replace 8-bit input values with 8-bit fixed matrix values corresponding to these values. The 8-bit hexadecimal outputs of this circuit are also true random outputs of TRNG.

3.2. Memory architecture

To analyze the proposed post-processing technique's statistical effects on the TRNG outputs, the Block Random Access Memory (BRAM) component given as in Fig. 6(D) is used. The column width and the address depth of the 16-bit up counter-addressed BRAM architecture are 8 bits and 65.536 rows, respectively. The design details are given as in Fig. 8(a). The clock signal of the counter and BRAM in Fig. 8(a) is common and the frequency of this signal is 1/8 of the clock signal used for sampling. So, for testing purposes, the 8-bit hexadecimal outputs of the TRNG are synchronously recorded to the memory address pointed to by the counter. Fig. 8(b) shows an example scenario for the memory location of the hexadecimal TRNG outputs. Since the post-processing technique is not based on reduction/compression, the minimum and the maximum output bit rate of the TRNG are 50 and 250 Mbit/s, respectively.

3.3. Modeling of adaptive sampling circuit

The presented TRNG architecture is tested for four different scenarios sampled at 50, 100, 150 and 250 MHz, respectively. In every scenario, the frequency adaptive clock signals required for memory and sampling operations of TRNG. They are obtained from a dataflow designed adaptive sampling circuit is given in Fig. 6(E). The internal structure and design details of this user-controlled block circuit element are as in Fig. 9. User-controllability enables TRNG to operate at different speeds by easily switching between sampling scenarios.

The adaptive sampling circuit consists of one Phase-Locked Loop (PLL), one 4×1 mux, and one frequency divider block circuit element. This circuit has two inputs, the input frequency of the FPGA chip (clk_50MHz) and the two-bit (sel1) control input obtained from the physical environment. In this system, clock signals of 50, 100, 200 and 250 MHz obtained from PLL are applied synchronously to the inputs of a 4 × 1 mux and a frequency divider (clk_divider) circuit. The control bits connected to the slider switches on the FPGA are also the common select pins of this circuit. The f_s output of the circuit directly connected to the output pin of the 4 × 1 mux is the sampling signal (f_s) of TRNG. The frequency of this signal is determined according to the state of the control bits. Another output of this signal is the clock signal (div_fs) used in the processing memory and obtained by dividing the active clock frequency by 8. These clock signals used for sampling and memory operations are dynamically calculated in the system according to the state of control inputs. Thus, the TRNG can easily switch between sampling scenarios. In the light of the details given about the implementation, the TRNG's real-time setup and the simulation results are as in Fig. 10.

4. Experimental validation and results

A good random number sequence in cryptography is based on the assumption that all the values forming the sequence are independent and uniformly distributed with equal probabilities (1/2). In other words, the random numbers should not contain dependencies causing weaknesses (correlation) and biased probability distributions. Because modern cryptographic system security is based on this basic assumption. So, a TRNG is expected to produce random numbers with a distribution as close to this ideal definition as possible without bias and correlation. However, physical noise sources often do not have sufficient entropy to provide this statistical adequacy. Thus, random numbers do not have proper statistical distribution and they occur with a specific deviation. Increasing the deviation from the ideal value for the occurrence probability of random numbers may cause an important security risk for cryptographic systems [3,36,37].

The experimental verification process of the study consists of three phases: the contribution of the proposed post-processing technique to the statistical competence of TRNG, hardware success and performance analysis. First, the contribution of the post-processing to the basic requirements such as bias, correlation, entropy, and statistical randomness on the outputs of TRNG are examined. The bit-level random numbers used for testing in the statistical analysis phase are obtained by executing the TRNG in real-time. So, every sampled set of the bit-level random number sequences is as much as the memory depth given in Fig. 6(D), i.e. 524.288 (65.536×8) bits

4.1. Bias analysis

Removing the statistical weaknesses of the noise source and improving the randomness quality of TRNG is an important function of post-processing techniques. In this section, extent the

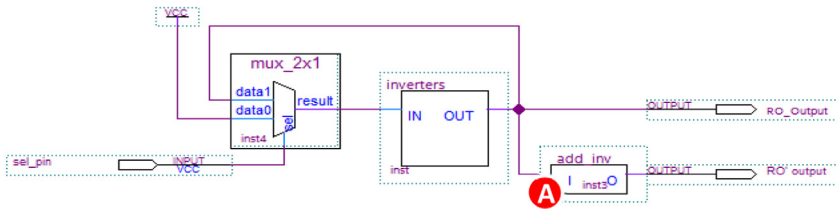

Fig. 5. Hardware modeling of ROs.

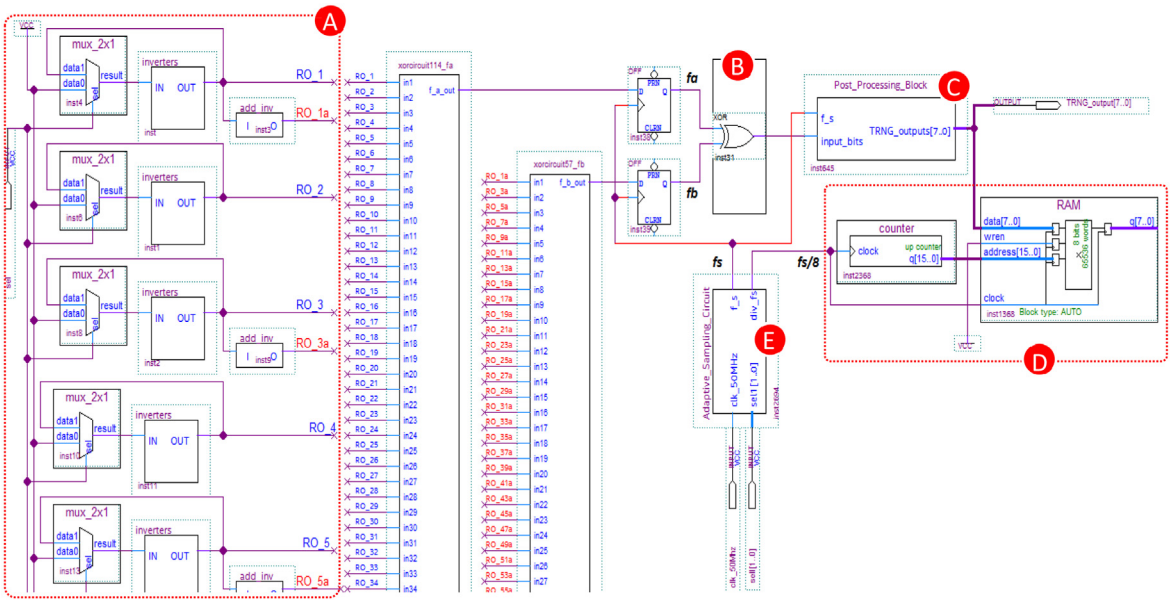

Fig. 6. Hardware modeling of the TRNG for a 200 MHz sampling scenario.

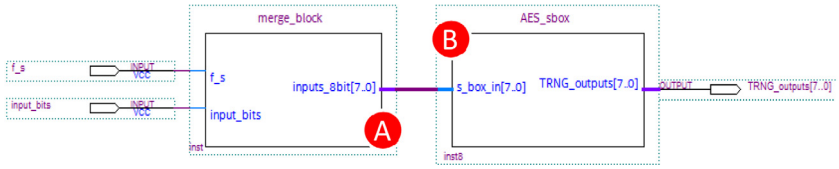

Fig. 7. Schematic structure of the AES s-box-based post-processing technique with designed dataflow.

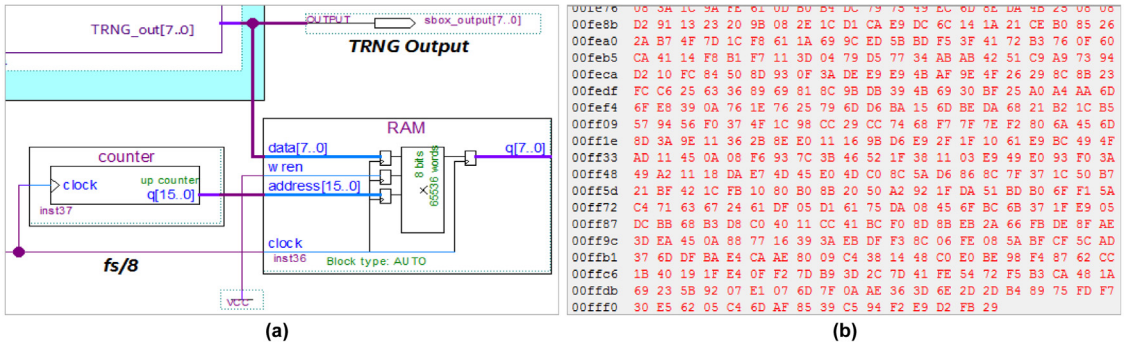

Fig. 8. (a) Memory architecture of the block and (b) the memory location of hexadecimal outputs.

proposed s-box-based post-processing technique can remove the bias on the random number sequences obtained from TRNG is examined. A total of 40 different random number sequences are used for the bias test in every scenario. Then, the probabilistic distributions of 0's in each random number sequence are calculated. Finally, the deviation amounts of these distributions from the ideal 1/2 value are examined. Fig. 11 shows the results obtained.

The increase in the deviation amount also means that tested random numbers will fail for the first test criterion (Frequency-Monobit test) of the National Institute of Standard and Technology (NIST) 800-22 test. The Monobit test measures the closeness of the occurrence probability of 0s and 1s to the expected value in an ideal random number sequence. This test is an important pre-test criterion for random numbers. Because, the test results can

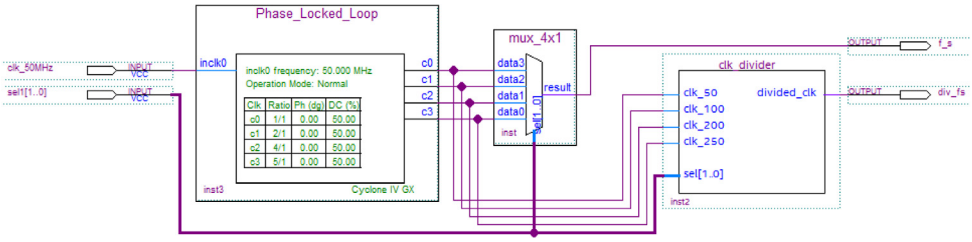

Fig. 9. The schematic design details of adaptive sampling circuit.

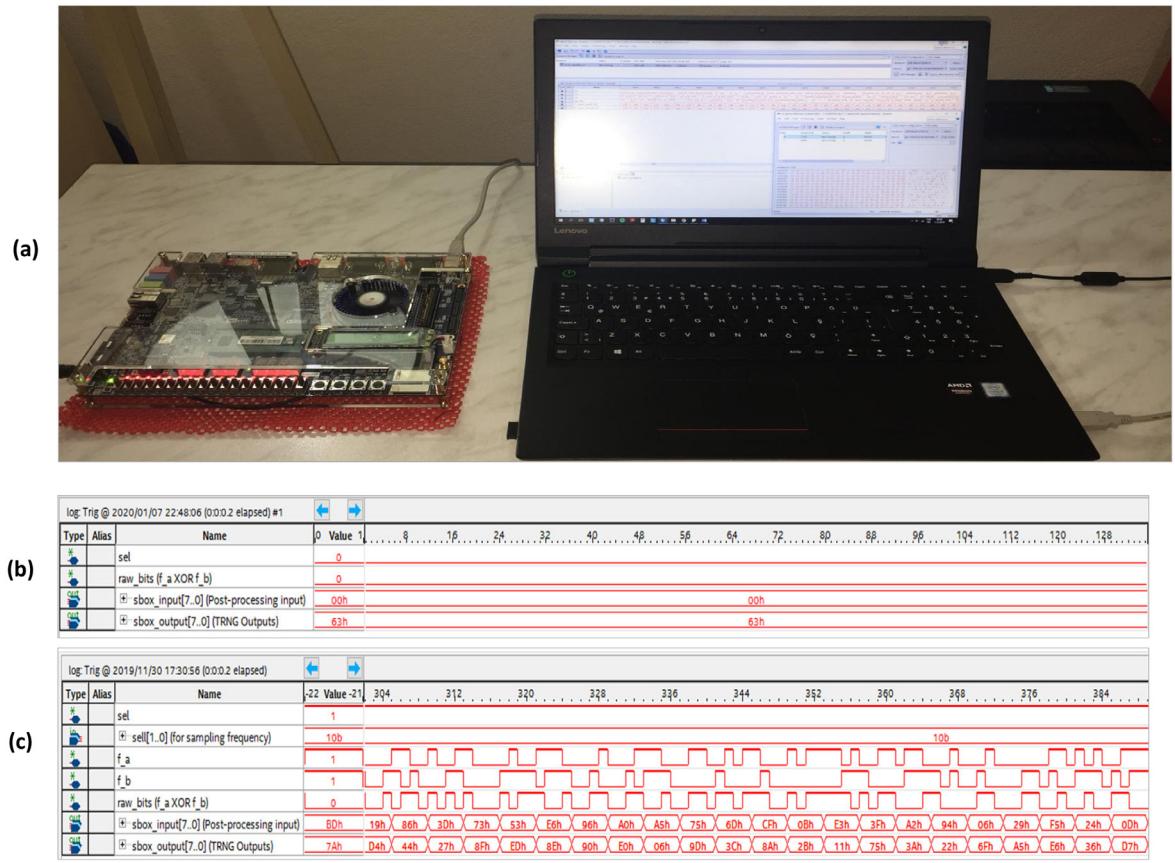

Fig. 10. (a) Real-time experimental setup, (b) initial and (c) run-time simulation results for TRNG on FPGA chip.

provide sufficient evidence to decide the tested number sequence is not random [38]. Fig. 11(a) clearly shows that raw random numbers occur with a deviation from the ideal value. For these results, where the occurrence probability of 1s is higher, it is observed that TRNG produces 35.231 pieces more 1s even in the best case. Whereas, the acceptable maximum cumulative difference value between array elements for a 524.288-bit number sequence must be 1.338 in the frequency test. Results in Fig. 11(b) shows that raw random numbers occur with a better uniform distribution after the post-processing is applied. In other words, the proposed post-processing method adjusted the random number occurrence probability to 1/2, and minimized the deviation. As a results, the proposed method successfully removed the bias. For the same results, the observed cumulative difference values of each random number sequence are below the acceptable maximum limit value. The SAC providing a balanced distribution between input and output values is an important design requirement for s-boxes. It can be said that this feature of the AES s-box plays an important role in the success of the test technique.

4.2. Autocorrelation analysis

The existence of a strong linear relationship (correlation) in random numbers makes the predecessors and successors of these numbers predictable to a privileged attacker. This relationship also indicates the presence of bias on random numbers. In this case, it is assumed that the TRNG does not produce random numbers independently and hence, there is no randomness. The autocorrelation test technique expressed in Eqs. (1) and (2). This test technique is used to investigate if the post-processed random numbers are independent i.e., have no correlation [37,39]. The goal of this test technique is to calculate the correlation between the random number sequence $[x_0, x_1, x_2 \ldots x_{n-1}]$ and the (non-cyclical) sequence obtained by shifting the original sequence by d. Eqs. (2) and (3). These formulations show the mathematical definition of the autocorrelation test technique.

$$A(d) = \sum_{i=0}^{n-d-1} b_i \oplus b_{i+d} \tag{2}$$

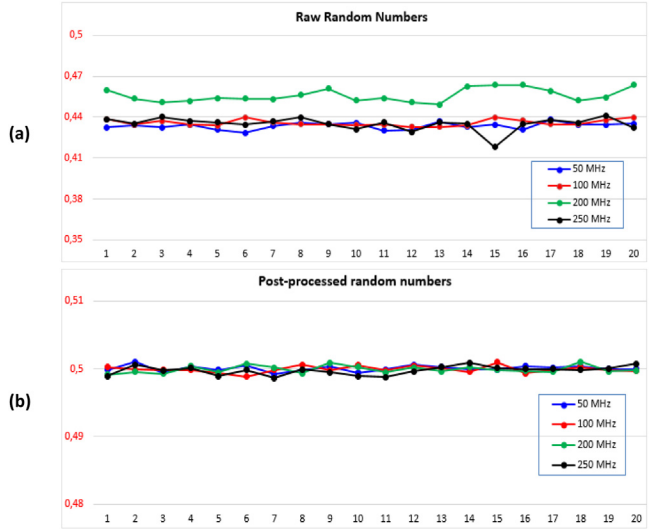

Fig. 11. Bias in random numbers (a) before and (b) after post-processing.

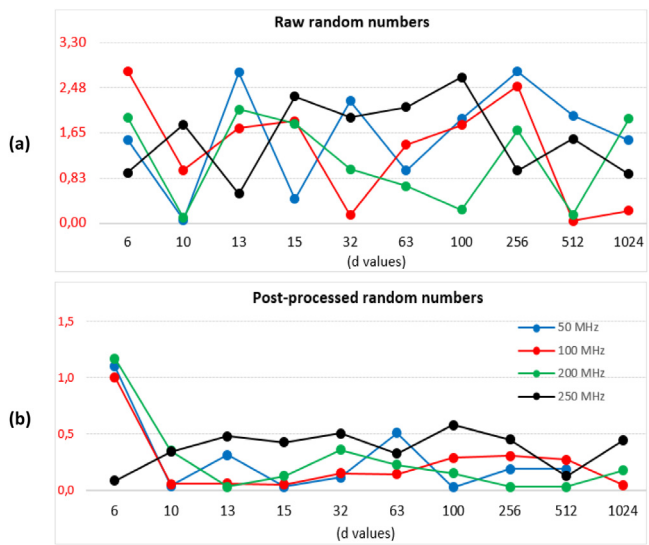

Fig. 12. Autocorrelation test results (a) before and (b) after post-processing.

$$X_5 = \frac{2[A(d) - (n-d)/2]}{\sqrt{(n-d)}} \tag{3}$$

where n and $d \in [1,\ (n/2)]$ are the sequence length and the shift amount, respectively.

In order to make the assumption that the predecessor and successor values of any random number sequence are statistically independent the $|X_5| \leq 1.6449$ condition must be fulfilled in the test. For other states of the X_5 coefficient, the independence assumption cannot be made statistically [37,39]. Fig. 12 shows the successful autocorrelation test results obtained for the post-processed numbers. For the autocorrelation analysis, 20 different random number sequences are investigated in every scenario. So, the data presented in Fig. 12 are the average X_5 values calculated separately for these random number sequences.

For the autocorrelation test results given in Fig. 12, d (shifting) values are selected randomly. Autocorrelation test results applied to the raw random numbers for each of the four different sampling scenarios are as in Fig. 12(a). When the results are examined, it is seen that the X_5 coefficients calculated for each

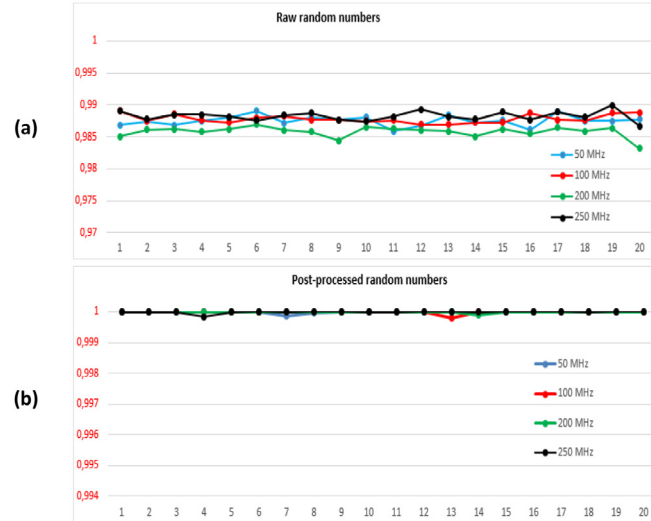

Fig. 13. Entropy test results for TRNG (a) before and (b) after post-processing.

scenario occur with a variable distribution below and above the maximum acceptable limit value (1.6449) for the test technique. In this case, it can be said that the test technique applied to raw random numbers is partially successful. After applying the proposed post-processing method to the raw random numbers, autocorrelation test results obtained for the same shifting (d) values are given in Fig. 12(b). The results show that the $|X_5| \leq 1.6449$ condition successfully satisfied in all random number sequences after the proposed post-processing technique has been applied. In other words, the statistical independence criterion for random numbers can be achieved by the proposed post-processing method. It can be said that especially the BIC criterion providing independence between the input and output bits of the AES s-box is an important factor in the success of the test technique.

4.3. Entropy analysis

The concept of Shannon entropy in information theory, is the measure of unpredictability of a random variable. Shannon defined the expected entropy value expressed as in Eq. (4). In Eq. (4), $p(x_i)$ denotes the occurrence probability of x_i where $x = [x_0,\ x_2 \cdots x_{n-1}]$. The $H(x)$ varies in the range of [0-1] in Eq. (4). It takes the maximum value (i.e. 1) as a theoretical result of the situation when the number sequence occurs with uniform distribution. When there is no uncertainty and the results can be known exactly, $H(x)$ takes the minimum value (i.e 0) and randomness cannot be mentioned in this case for number sequences [4,40].

$$H(x) = -\sum_{i=0}^{n-1} p(x_i)\ .\ \log_2\left(\frac{1}{p(x_i)}\right) \tag{4}$$

For random numbers generated by a cryptographically strong TRNG, the entropy value per bit should ideally be close to 1 and 1. So, another important statistical purpose of the post-processing techniques is to pull the entropy-per-bit value as close as possible to the ideal value. For test results very close to the ideal value given in Fig. 13(b), it can be clearly said that the post-processing increases entropy per bit and successfully fulfills this basic function. Entropy in the system has reached the maximum value as a normal result of the post-processing being able to produce array elements close to the ideal statistical value of 1/2.

Furthermore, avoiding compression-based operations that would result in entropy loss on raw bits, increases the performance of the proposed method.

4.4. NIST 800-22 statistical test

It is imperative to guarantee that the TRNG has good statistical properties using statistical test tools. That is required for directly using the TRNG outputs in cryptography. At the last stage of the statistical analysis, the NIST 800-22 test suite [41] is used. This test suite is stronger and more widely applicable than other test groups. The NIST 800-22 statistical randomness test consists of 15 different subtest criteria. In order to decide whether the number sequence is random for any subtest criterion, two standard statistical parameters such as p-value and a calculated for the related number sequence are examined. The p-value parameter measured for the relevant sub-criterion changing in the range of [0-1]. It is randomness statistic that the numbers sequence under test is random. The parameter a supports the assumption that the number sequence is not random, also corresponds to the typical significance level for the test criteria. The parameter a corresponding to the typical significance level is in the range of [0.001-0.01], and it is accepted that the TRNG produces 99 of every 100 random number sequences correctly for $\alpha = 0.01$. The p-value $\geq \alpha$ condition must be fulfilled for each of the 15 separate sub-test criteria. This condition is required for the number sequences tested are statistically random. Table 2 shows the successful NIST 800-22 statistical test results for the TRNG with the proposed post-processing. In Table 2, α is set to 0.01. Furthermore, the sufficiently long number sequences for the 14th and 15th test criteria are obtained by using memory architecture with a 16-bit column width.

When the NIST 800-22 test results given in Table 2 are analyzed, the p-value parameter measured in all 15 different test criteria for the post-processed random numbers is greater than 0.01. The NIST 800-22 statistical test results verify that the TRNG with the proposed post-processing technique successfully meets the statistical requirements related to security in four different scenarios. The statistical results in Table 2 confirm the effectiveness of the proposed method. They are coincided with the results given in Figs. 11–13. Also, the obtained results show that the TRNG can be used for cryptographic purposes. As a result, the proposed post-processing technique is applicable for cryptographic areas.

4.5. Performance analysis of the proposed post-processing technique

In the choice of any post-processing method, features such as the compression rate and area-energy consumption in addition to security and randomness can be decisive in terms of the performance of the TRNG. Especially, prominent features such as simplicity and cost for algorithmic methods, security and functionality in cryptographic methods can be an important reason for preference [41–43].

In cases where random numbers are formed by high correlation and bias coefficients, algorithmic methods can create only an insufficient healing effect for a physical TRNG. The proposed s-box based post-processing technique has a simple fictional structure that can be applied easily as in algorithmic methods. However, it is much stronger than these methods. Because it contains an atomic structure with strong encryption features such as AES s-box with the best mathematical features in the literature. The SAC and BIC criteria provide a balanced distribution and independence between the input and output values of the AES s-box. Especially, these design criteria of s-box can provide a strong statistical sufficiency for the proposed method.

The distinctive features of cryptographic methods such as confusion and diffusion can produce a strong statistical effect on random numbers. Moreover, the high non-linearity degree of these methods can offer an extra security contribution for TRNG. However, the area-energy consumption of these methods with high computational complexity creates additional hardware cost to the TRNG. Whereas, using only a powerful atomic sub-component such as s-box instead of a whole cryptographic system significantly reduces the complexity of the proposed method compared to these methods. Therefore, the proposed post-processing method has the same strong statistical effect with lower area-energy consumption as opposed to the other cryptographic methods. This also reduces the hardware production cost of random numbers. The same case is true for chaos-based post-processing methods. Because these methods require extra resource and energy demand for floating-point operations at the hardware level, despite of their simple deterministic structure. Furthermore, the exponential sensitivity effect to initial conditions can easily be achieved with AES s-box's strict avalanche criteria. That is also known as the "Butterfly Effect" making chaotic systems cryptographically effective.

The need of a non-periodic additional input ensuring non-linearity property for TRNG can be seen as a disadvantage of the proposed method. However, these additional inputs are easily acquirable for a digital TRNG. As in this study, different oscillator sets defined on the noise source or different times of the same sampling signal can be used. These inputs obtained at minimum cost make TRNG more reliable by increasing the contribution of true randomness in the system.

4.6. Applicability and area-energy consumption

It is imperative to meet the statistical randomness criteria required by strong TRNG designs in terms of cryptographic system security. The main goal of the post-processing techniques used in these designs is to meet these basic requirements. The increasing structural complexities of the post-processing methods used for security, increases the hardware resource demand and energy consumption of TRNG. This phenomenon is important in evaluating the applicability and practical use of TRNG. So, besides the agility of the post-processing technique, it is important to fulfill the statistical requirements for TRNG at minimum cost is crucial for applicability. This also reduces the production cost of key bits in the system and facilitates the applicability of TRNG as a whole on resource-restricted FPGA devices [13,43].

The proposed AES s-box based post-processing technique is structurally as simple and as easily applicable as XOR post-processing. Because the complexity of the post-processing technique is minimal thanks to consisting of fixed matrix-based simple transformations. Therefore, the negative contribution of the proposed method to the hardware resource demand and energy consumption of TRNG is quite low. Table 3 shows the hardware resource demand required for the case when the post-processing technique is applied independently and along with the TRNG. The effectiveness, simplicity and low energy consumption of the proposed method make the TRNG usable in lightweight cryptographic applications. Furthermore, the data in Table 3 shows that the TRNG is based on general principles in terms of design parameters. So, the TRNG can be implemented on all FPGA devices.

4.7. Throughput analysis

High-speed TRNG architectures are needed for today's modern cryptographic applications. Because in these applications, the concept of speed is considered an important metric value for

Table 2
The NIST 800-22 test results obtained from the TRNG.

Test name	TRNG, without post-processing		TRNG, with proposed post-processing					
	50 MHz p-value	Result	Setting parameters	50 MHz p-value	100 MHz p-value	200 MHz p-value	250 MHz p-value	Result
Frequency test	–	Fail		0.825	0.647	0.531	0.813	Success
Frequency test within a block	–	Fail	M=128	0.439	0.978	0.444	0.352	Success
Run test	–	Fail		0.954	0.263	0.655	0.784	Success
Test for the longest run of ones in a block	–	Fail		0.819	0.411	0.854	0.531	Success
Binary matrix rank	0.753	Success		0.711	0.648	0.361	0.562	Success
Discrete Fourier transform	0.247	Success		0.692	0.705	0.811	0.710	Success
Non-Overlapping template matching	–	Fail	m=9	0.802	0.900	0.958	0.739	Success
The overlapping template matching test	–	Fail	B=11111111	0.441	0.749	0.926	0.275	Success
Maurer' s universal statistical test	0.224	Success		0.888	0.946	0.870	0.871	Success
Linear complexity test	–	Fail	M=500	0.352	0.972	0.603	0.529	Success
Serial test	–	Fail	m=16	0.563	0.436	0.723	0.313	Success
				0.448	0.550	0.830	0.814	
Approximate entropy test	–	Fail	m=10	0.830	0.727	0.759	0.814	Success
Cumulative sums	–	Fail		0.849	0.910	0.393	0.957	Success
Random Excursions	–		–					
$x = -4$	–	Fail		0.546	0.972	0.561	0.593	Success
$x = -3$	–	Fail		0.887	0.741	0.211	0.874	Success
$x = -2$	–	Fail		0.687	0.212	0.417	0.632	Success
$x = -1$	–	Fail		0.080	0.365	0.921	0.707	Success
$x = 1$	–	Fail		0.957	0.097	0.314	0.241	Success
$x = 2$	–	Fail		0.135	0.593	0.096	0.317	Success
$x = 3$	–	Fail		0.696	0.578	0.658	0.687	Success
$x = 4$	–	Fail		0.989	0.687	0.436	0.509	Success
Random Excursions Variant			–					
$x = -9$	–	Fail		0.437	0.311	0.768	0.409	Success
$x = -8$	–	Fail		0.880	0.339	0.301	0.604	Success
# of Passed Tests	**3**	**–**		**15**	**15**	**15**	**15**	**-**

Table 3
Device utilization summary for a TRNG hardware design using Cyclone IV GX: EP4CGX150.

Area/resource usage	Post-processing technique used	TRNG with post-processing used	Total	Available	Utilization
Total Logic Element Number	–	1.309	1.309	149.760	<1%
Combinational ALUTs	227	730	957	149.760	<1%
Dedicated Register Number	19	744	763	149.760	<1%
Total Memory Bits	–	180.224	180.224	6.635.520	3%
Total Pins	–	12	12	508	2%
Total PLLs	–	1	1	8	13%
Power Consumption	7.96 mW	139.18 mW		–	

efficiency. Therefore, the output bit rate for a TRNG is not a cryptographically insignificant situation and is the second important evaluation criterion after security. For this reason, the compression rate of any post-processing technique is desired to be minimum for TRNG's performance. The compression rates of existing methods in the literature cause a decrease in the output bit rate of TRNG. These rates are given in Table 4. The compressionless feature of proposed method does not cause entropy loss in the system. That is another alternative superiority of the proposed method to the current methods in the literature. The n value in Table 4 is the generation time of the one-bit random sign in the post-processing stage of a chaotic system. For example, in [27], the calculation time of the chaotic system is 23 clock pulses. That is, the output bit rate of TRNG has decreased by 1/23.

The decrease in the output bitrate of TRNG causes inefficiency for today's applications where key exchange occurs in very small time frames. The compressionless feature of the proposed method does not result in entropy and output bit rate loss in the system. That is important advantage of the proposed post-processing technique. This completely eliminates the negative limiting effect of compression-based methods to the output bitrate of TRNG. Consequently, a fast TRNG design with a high output bit rate and low hardware costs is obtained. As a result, the TRNG's performance in terms of output bit rate is significantly higher in comparison to the studies in literature. The comparison

Table 4
Reduction rate of post-processing techniques.

Post-Processing	Compression rate
XOR	1/2
Von Neumann	≈3/4
H-function	1/2
Resilient functions	1/16
Hash functions	1/16
Chaotic systems	1/n
Proposed post-processing	–

data in Table 5 clearly confirms the positive contribution of the post-processing technique to the performance of TRNG.

The results in Table 5 shows that the proposed post-processing technique meets the hardware design goals in addition to the statistical requirements. Therefore, the outputs of TRNG can be used in high speed cryptographic applications. The analysis results in this section show us that the proposed method can produce a powerful and functional solution as much as simple to the statistical weakness problem of TRNGs. Furthermore, the s-box architecture can be remarkably protected AES against advanced cryptanalysis attacks. That makes TRNG stronger against aggressive tampering and external fluctuations.

Table 5
Comparison of the main characteristics of different TRNG solutions in the literature.

Reference	Entropy source	Device	Hardware resources	Post-processing	Operating frequency (MHz)	Throughput (Mbps)
[4]	Chaos+RO	Altera Cyclone IV	2.011 LEs	Yes	200	15.4
[6]	RO	Altera Cyclone II	83 LEs	No	100	100
[9]	RO	Altera Cyclone V	655 LEs	Yes	40	2.2
[12]	Chaos	Xilinx Kintex-7	444 LEs	Yes	59.4	125 (kpbs)
[13]	RO	Altera Cyclone IV	715 LEs	Yes	200	61.64
[17]	RO	Xilinx Virtex-II	680 Slices	Yes	40	2.5
[19]	Metastability	Altera Cyclone II	1.851 LEs	Yes	50	26.6
[21]	RO	Altera Cyclone IV	1.110 LEs	Yes	50	1.2
[23]	RO	Xilinx Virtex-5	2.467 Slices	Yes	263	36
[29]	PLL	Altera Cyclone II	1.334 LEs	Yes	70	26.84
[27]	RO	Altera Cyclone IV	–	Yes	450	20.45
[28]	Chaos+Ro	Altera Cyclone IV	15.897 Les	Yes	450	34.6
[44]	Delay chain	Altera Stratix	–	Yes	20	20.0
[45]	Chaos	Xilinx Virtex-6	12.462 Slices	Yes	293	58.76
[46]	Artificial Neural Network (ANN)	Xilinx Virtex-6	87.704 Slices	Yes	231	115.794
[47]	ANN	Xilinx Virtex-6	131.202 Slices	Yes	167	167.4
[48]	Metastability/Jitter	Xilinx Kintex	5 Slices	yes	300	100
[49]	Metastability	Xilinx Virtex −6	224 Slices	yes	50	50
[50]	Metastability	Altera Cyclone IV	298 LEs	Yes	150	150
[51]	Chaos	Xilinx Spartan 6	256 LEs	No	125	125
[52]	Metastability	Altera Cyclone III	511 LEs	Yes	–	133
[53]	Metastability	Xilinx Virtex-4	580 Slices	no	100	12,5
[54]	Metastability	Xilinx Spartan-6	60 Slices	Yes	–	12.6
[55]	Dual Metastability	Xilinx Spartan-3E	–	No	50	5.0
[56]	RO	Xilinx Spartan-3	270 Slices	Yes	24	6.0
[57]	RO	Xilinx Spartan-6	15 LEs	Yes	100	1.15
[58]	RO	Smart Fusion 2	675 LEs	Yes	300	3.62
[59]	RO	Altera Cyclone V	230 LEs	Yes	100	11.1
TRNG	**RO**	**Altera Cyclone IV**	**1309 LEs**	**Yes**	**250**	**250**

5. Conclusions

In this study, a novel AES s-box based, low area-energy consumption, compressionless and reliable post-processing technique is proposed to improve the statistical quality of the TRNGs. Hardware implementation and cryptographic verification of the proposed post-processing technique has been performed in a real-time FPGA environment. In this mean, the post-processing technique is applied to a RO-based TRNG architecture with poor statistical randomness quality in four different scenarios. Numbers obtained from each scenario are subjected to bias, correlation, entropy, and NIST 800-22 statistical randomness evaluation tests. The obtained successful results confirm that high quality and speed random numbers can be produced from TRNG by application of the proposed method. Also, these results confirm the idea that s-boxes can be used for different cryptographic purposes besides their general purpose.

Especially, the combinational logic behavior of the AES s-box can be easily modeled as a look-up table on static RAMs. That makes the proposed post-processing technique simple and easy-to-implement. This also significantly reduces the area-energy consumption of the method by removing the computational complexity of the AES s-box based on algebraic techniques. In addition, to guarantee good statistical properties for random numbers without the need for compression/reduction based operations, the method allows the TRNG to produce random numbers at high speed and low hardware cost. Its low hardware cost and easy applicability allow the method to be tested when designing TRNG with various noise sources.

Declaration of competing interest

The authors declare that they have no known competing financial interests or personal relationships that could have appeared to influence the work reported in this paper.

Acknowledgment

The authors gratefully thanks to the Referee for the constructive comments and recommendations, which definitely helped to improve the readability and quality of the study.

References

[1] Çiçek İ, Pusane AE, Dündar G. Random number generation using field programmable analog array implementation of logistic map. In: 2013 21st signal processing and communications applications conference (SIU). IEEE; 2013, p. 1–4.
[2] Özkaynak F. Cryptographically secure random number generator with chaotic additional input. Nonlinear Dynam 2015;78(3):2015–20.
[3] Özkaynak F. Kriptolojik Rasgele Sayı Üreteçleri. Türkiye Bilişim Vakfı Bilgisayar Bilimleri ve Mühendisliği Dergisi 2015;8(2):37–45 (in Turkish).
[4] Garipcan AM, Erdem E. Implementation and performance analysis of true random number generator on FPGA environment by using non-periodic chaotic signals obtained from chaotic maps. Arab J Sci Eng 2019;44(11):9427–41.
[5] Davies RB. Exclusive OR (XOR) and hardware random number generators. 2002, http://www.robertnz.net/pdf/xor2.pdf.
[6] Wold K, Tan CH. Analysis and enhancement of random number generator in FPGA based on oscillator rings. Int J Reconfigurable Comput 2009;2009:1–8.
[7] Fischer V. A closer look at security in random number generators design. In: International workshop on constructive side-channel analysis and secure design. Berlin: Springer; 2012, p. 167–82.
[8] Stipčević M, Koç ÇK. True random number generators. In: Open problems in mathematics and computational science. Springer; 2014, p. 275–315.
[9] Sunar B, Martin WJ, Stinson DR. A provably secure true random number generator with built-in tolerance to active attacks. IEEE Trans Comput 2006;56(1):109–19.
[10] Gupta R, Pandey A, Baghel RK. FPGA implementation of chaos-based high-speed true random number generator. Int J Numer Modelling, Electron Netw Devices Fields 2019;32(5):e2604. http://dx.doi.org/10.1002/jnm.2604.
[11] Rožić V, Verbauwhede I. Hardware-efficient post-processing architectures for true random number generators. IEEE Trans Circuits Syst II: Express Briefs 2018;66(7):1242–6.
[12] Karakaya B, Gülten A, Frasca M. A true random bit generator based on a memristive chaotic circuit: Analysis, design and FPGA implementation. Chaos Solitons Fractals 2019;119:143–9.
[13] Garipcan AM, Erdem E. Implementation of a digital TRNG using jitter based multiple entropy source on FPGA. Informacije MIDEM 2019;49(2):79–90.

[14] Von Neumann J. Various techniques used in connection with random digits. Natl Bureau Stand Appl Math Ser 1951;12:36–8.
[15] Dichtl M. Bad and good ways of post-processing biased physical random numbers. In: Fast software encryption workshop – FSE, vol. 4593. 2007. p. 127–52.
[16] Rožić V, Yang B, Dehaene W, Verbauwhede I. Iterating von Neumann's post-processing under hardware constraints. In: 2016 IEEE international symposium on hardware oriented security and trust (HOST). IEEE; 2016, p. 37–42.
[17] Schellekens D, Preneel B, Verbauwhede I. FPGA vendor agnostic true random number generator. In: Proc. 16th int. conf. field programmable logic and applications – FPL. 2006. p. 1–6.
[18] Golic JD. New methods for digital generation and postprocessing of random data. IEEE Trans Comput 2006;55(10):1217–29.
[19] Sivaraman R, Rajagopalan S, Sridevi A, Rayappan JBB, Annamalai MPV, Rengarajan A. Metastability-induced TRNG architecture on FPGA. Iran J Sci Technol Trans Electr Eng 2020;44(1):47–57.
[20] Istvan H, Suciu A, Cret O. FPGA based TRNG using automatic calibration. In: IEEE 5th international conference on intelligent computer communication and processing. 2009. p. 373–6.
[21] Tuncer SA. Real-time random number generation with RO-based double PUF. Informacije MIDEM 2018;48(2):121–8.
[22] Dichtl M. How to predict the output of a hardware random number generator. In: International workshop on cryptographic hardware and embedded systems. Berlin, Heidelberg: Springer; 2003, p. 181–8.
[23] Łoza S, Matuszeqski L. A true random number generator using ring oscillators and SHA-256 as post-processing. In: 2014 international conference on signals and electronic systems (ICSES). IEEE; 2014, p. 1–4.
[24] Márton K, Pârvu L, Suciu A. The impact of post-processing functions on random number sequences. In: 17th RoEduNet conference: Networking in education and research. IEEE; 2018, p. 1–6.
[25] Jun B, Kocher P. The Intel Random Number Generator, white paper prepared for Intel Corp. Apr. 1999.
[26] Suresh VB, Burleson WP. Entropy and energy bounds for metastability based TRNG with lightweight post-processing. IEEE Trans Circuits Syst I Regul Pap 2015;62(7):1785–93.
[27] Avaroğlu E, Tuncer T, Özer AB, Ergen B, Türk M. A novel chaos-based post-processing for TRNG. Nonlinear Dynam 2015;81(1–2):189–99.
[28] Garipcan AM, Erdem E. A TRNG using chaotic entropy pool as a post-processing technique: analysis, design and FPGA implementation. Analog Integr Circuits Signal Process 2020;1–20.
[29] Rethinam S, Rajagopalan S, Janakiraman S, Arumugham S, Amirtharaian R. Jitters through dual clocks: An effective entropy source for true random number generation. In: 2018 international conference on computer communication and informatics (ICCCI). 2018, p. 1–5.
[30] Chan JJM, Thulasiraman P, Thomas G, Thulasiram R. Ensuring quality of random numbers from TRNG design and evaluation of post-processing using genetic algorithm. J Comput Commun 2016;4(4):73–92.
[31] Karaahmetoğlu O, Sakallı MT, Buluş E, Tutănescu I. A new method to determine algebraic expression of power mapping based S-boxes. Inform Process Lett 2016;113(7):229–35.
[32] Tanyildizi E, Özkaynak F. A new chaotic S-box generation method using parameter optimization of one dimensional chaotic maps. IEEE Access 2019;7:117829-117838.
[33] Nyberg K. Differentially uniform mappings for cryptography. In: Advances in cryptology -Eurocrypt 93. Springer- Verlag; 1994, p. 55–64.
[34] Özkaynak F. Construction of robust substitution boxes based on chaotic systems. Neural Comput Appl 2019;31(8):3317–26.
[35] Daemen J, Rijmen V. AES proposal: Rijndael. In: First advanced encryption conference, California. 1998.
[36] Fischer V, Bernard F, Bochard N. Modern random number generator design – Case study on a secured PLL-based TRNG. IT - Inf Technol 2019;61(1):3–13.
[37] Alhadawi HS, Zolkipli MF, Ismail SM, Lambić D. Designing a pseudorandom bit generator based on LFSRs and a discrete chaotic map. Cryptologia 2019;43(3):190–211.
[38] Ozkaynak F. A novel random number generator based on fractional order chaotic chua system. Elektron Elektrotech 2020;26(1):52–7.
[39] Menezes AJ, Oorschot PC, Vanstone SA. Handbook of applied cryptography. Boca Raton, FL, USA: CRC Press; 1996.
[40] Lambić D, Nikolić M. Pseudo-random number generator based on discrete-space chaotic map. Nonlinear Dynam 2017;90(1):223–32.
[41] Rukhin A, Soto J, Nechvatal J, Smid M, Banks D. A statistical test suite for random and pseudorandom number generators for statistical applications. NIST Special Publication in Computer Security; 2001.
[42] Çavuşoğlu Ü, Kaçar S, Zengin A, Pehlivan I. A novel hybrid encryption algorithm based on chaos and S-AES algorithm. Nonlinear Dynam 2018;92(4):1745–59.
[43] Fischer V, Bernard F, Bochard N, Aubert A, Danger J. True random number generators in configurable logic devices, Project ANR - ICTeR. 2009. p. 23–8.
[44] Danger J-L, Guilleya S, Hoogvorsta P. High speed true random number generator based on open loop structures in FPGAs. Microelectron J 2009;40(11):1650–6.
[45] Koyuncu I, Ozcerit AT. The design and realization of a new high speed FPGA-based chaotic true random number generator. Comput Electr Eng 2017;58:203–14.
[46] Alcin M, Koyuncu I, Tuna M, Varan M, Pehlivan I. A novel high speed artificial neural network–based chaotic true random number generator on field programmable gate array. Int J Circuit Theory Appl 2019;47(3):365–78.
[47] Tuna M, Karthikeyan A, Rajagopal K, Alcin M, I Koyuncu. Hyperjerk multiscroll oscillators with megastability: Analysis, FPGA implementation and a novel ANN-ring-based true random number generator. AEU-Int J Electr Commun. https://doi.org/10.1016/j.aeue.2019.152941.
[48] Stanchieri GDP, De Marcellis A, Palange E, Faccio M. A true random number generator architecture based on a reduced number of FPGA primitives. AEU-Int J Electr Commun 2019;105:15–23.
[49] Yang X, Cheung RCC. A complementary architecture for highspeed true random number generator. In: 2014 international conference on field-programmable technology (FPT). IEEE; 2014, p. 248–51.
[50] Wu X, Li S. A new digital true random number generator based on delay chain feedback loop. In: 2017 IEEE International symposium on circuits and systems (ISCAS). 2017. p. 1–4.
[51] Yang Y, Jia S, Wang Y. A reliable true random number generator based on novel chaotic ring oscillator. In: 2017 IEEE international symposium on circuits and systems (ISCAS). IEEE; 2017, p. 1–4.
[52] Cherkaoui A, Fischer V, Fesquet L, Aubert A. A very high speed true random number generator with entropy assessment. In: International conference on cryptographic hardware and embedded systems. 2013. p. 179–96.
[53] Hata H, Ichikawa S. FPGA Implementation of metastability-based true random number generator. IEICE Trans Inf Syst 2012;95(2):426–36.
[54] Wieczorek PZ. An FPGA implementation of the resolve time-based true random number generator with quality control. IEEE Trans Circuits Syst I Regul Pap 2014;61(12):3450–9.
[55] Wieczorek PZ, Gołofit K. Dual-metastability time-competitive true random number generator. IEEE Trans Circuits Syst I Regul Pap 2013;61(1):134–45.
[56] Anandakumar NN, Sanadhya SK, Hashmi MS. FPGA-based true random number generation using programmable delays in oscillator-rings. IEEE Trans Circuits Syst II: Express Briefs 2019;67(3):570–4.
[57] Yang B, Rožic V, Grujic M, Mentens N, Verbauwhede I. ES-TRNG: A high-throughput, low-area true random number generator based on edge sampling. IACR Trans Cryptogr Hardw Embed Syst 2018;2018(3):267–92.
[58] Petura O, Mureddu U, Bochard N, Fischer V, Bossuet L. A survey of AIS-20/31 compliant TRNG cores suitable for FPGA devices. In: 2016 26th international conference on field programmable logic and applications (FPL). IEEE; 2016, p. 1–10.
[59] Grujić M, Yang B, Rožić V, Verbauwhede I. Towards inter-vendor compatibility of true random number generators for FPGAs. In: 2018 design, automation & test in europe conference & exhibition (DATE). IEEE; 2018, p. 1520–3.